CASE CONSTRUCTION

ALPHA SERIES SKID STEER & COMPACT TRACK LOADERS
ELECTRONIC KEYLESS LOCKING SYSTEM

Example below navigates through the ELECTRONIC KEYLESS LOCKING SYSTEM settings via the main SETUP menu.

Step 1.
Before sitting in the seat with the Engine off and the electronics in the sleep mode, press and hold the "AUX OVERRIDE" & "OPERATE" buttons at the same time for 5 - 7 seconds until SETUP appears in the display, then sit in the operator's seat.

Step 2.
Press the "START" button to scroll between functions until you reach LOCK. Press "POWER" to access the LOCK menu.

Step 3.
Press "START" to scroll through LOCK menu items. Press "POWER" to select current menu item.

Note: OWNCR *is shown when an owner code has not been set.*

Note: UNLOC *is shown when an owner code has been set and is locked or unlocked.*

Note: EXIT *will take you back to the main setup menu level LOCK.*

Step 4.
Press "START" to change the code numbers and "POWER" to scroll to the next number in the code.

Note: *If you cannot remember or enter an incorrect code, you will return to OWNCR.*

Step 5.
Enter the correct user code and press "POWER"

Step 6.
If an incorrect code is entered, an ERROR message will appear in the AIC and return you to UNLOC.

Step 7.
If a correct code is entered, an OWNER message will appear in the AIC. Press "POWER" to access USER menu. Press "START" to scroll through USER 1 through 9. Press "POWER" to select USER.

Step 8.
After a USER is selected, an AIC message of ON or OFF will be displayed. Press "START" to scroll to the desired setting and press "POWER" to save.

Note: *When LOCK setting is saved, the AIC will display your selection and return you to the top level LOCK menu.*

Electronic Keyless Locking System made simple:
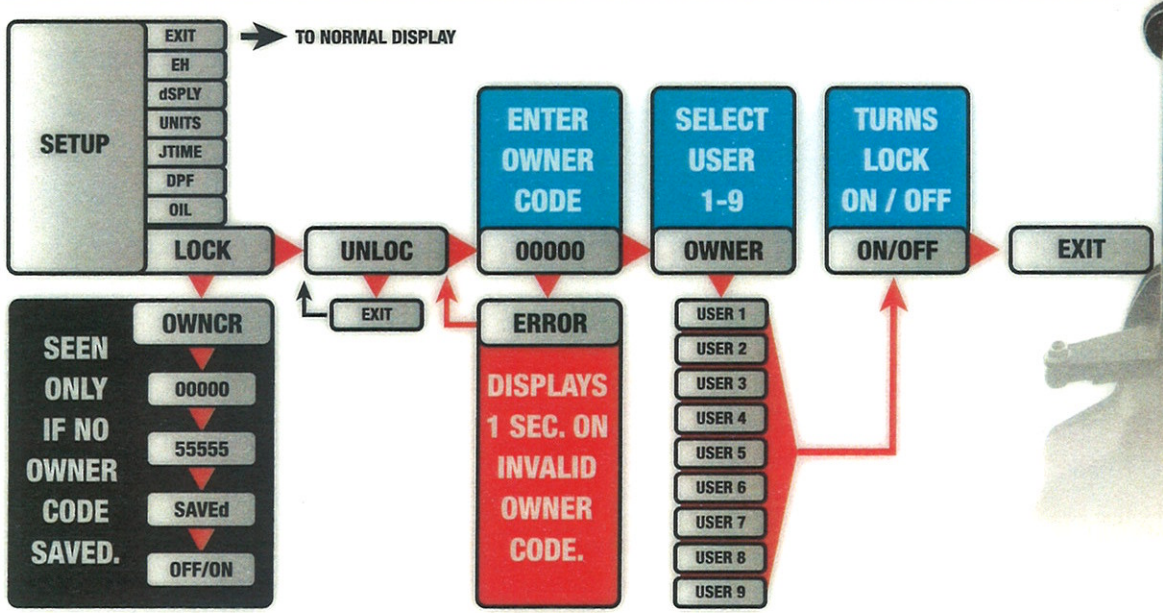
- ✓ Push "AUX OVERRIDE" and "OPERATE" for 5 -7 sec.
- ✓ Press "START" to scroll to the LOCK menu.
- ✓ Press "POWER" to enter the LOCK menu.
- ✓ Enter a valid OWNER CODE.
  If no OWNER CODE has been established the system will require that you enter one. CANNOT be changed once saved.
- ✓ Press "START" to scroll available users slots 1 - 9.
- ✓ Press "POWER" to save desired user.
- ✓ Press "START" to toggle between LOCK ON or LOCK OFF.
- ✓ Press "POWER" to save setting.
- ✓ Exit the system by toggling to EXIT and pressing "POWER" until the AIC Display is back to its normal operating mode.